Strain relief accessories

Brass

The DH spacer sleeve is required for stacking the ZL strain relief plate. This allows for cables to be stacked, thereby saving space.
The ELB insert bushing can be laid into the strain relief plate type ZL. It prevents cold flow of the plastic at the fixing point during heavy strain or permanent movement.

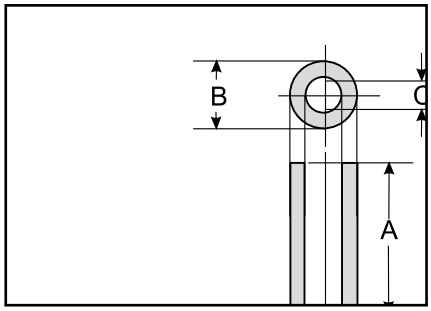

DH...

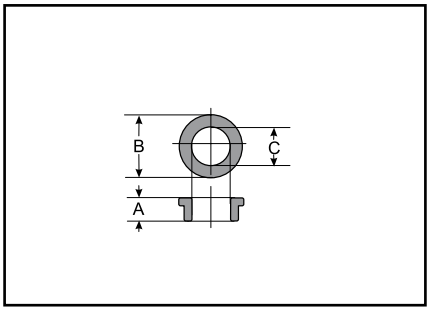

ELB...

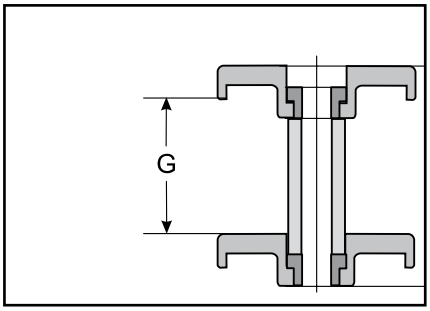

Two-tier assembly

Type	Order no.	A mm	B mm	C mm	G mm	H mm	Pack qty
For ZL 04 and ZL 05							
DH 30/8	87701054	30.0	8.5	5.2	26.0	44.0	1
For ZL39-180/8							
ELB / 6	87701050	6.5	12.0	6.2	-	-	1
ELB/8 *	87701060	6.5	13.4	8.2	-	-	1
DH 32/6	87701052	32.0	12.0	6.3	28.0	46.0	1
DH 32/8 *	87701062	32.0	13.0	8.3	28.0	46.0	1
* for ZL 180/8 only							